Mark 70 Series

CRN Registration Number Available

Sliding Gate Control Valves

The Mark 70 Series is a line of pneumatically-operated diaphragm control valves that combine multiple spring actuators with the precision of Jordan Valve's advanced sliding gate seat for closer control and greater accuracy.

Jordan's unique sliding gate control valve trim teams up with pressure, temperature pH, level, or flow controllers for fast response, long term reliability, and high levels of accuracy on steam, gas, liquid and chemical services.

Consisting of a modulating disc and stationary plate, the sliding gate seat components are slotted with multiple orifices that align to provide the precise flow needed to maintain the process requirements. The valve strokes in a fraction of the travel required by conventional control valves for rapid correction of any deviation from the process setpoint.

This brochure includes the following Series:

- MK70: a line of pneumatically-operated diaphragm control valves that combine multiple spring actuators with the precision of Jordan Valve's advanced sliding gate for closer control and greater metering accuracy
- MK70PG: a pump governor with its control port connected to the pump discharge line. The valve throttles to maintain a constant pump discharge by controlling the steam flow to the pump.
- MK701/702: for higher capacity requirements.
- MK707: features an equal percentage flow characteristic.
- MK711: a linear control valve in sizes up to 6" (DN150) with Cv's to 395 (340 Kv)
- MK74: controls fugitive emissions while reducing the risks associated with toxic, corrosive, explosive and high temperature fluids
- MK76: a low profile, lightweight "on-off" control valve

Features

- Totally enclosed multi-spring actuator – minimizes deadband and is field reversible without the use of special tools or additional parts
- Compact design and simple construction – allows fast, simple installation and easy maintenance
- Sliding gate seats provide:
  - Straight-through flow for reduced turbulence and quiet operation
  - Short stroke for fast response and accurate control
  - Easily interchangeable Cv's
  - Tight shutoff due to overlap of seat closure area
- Stem packing is four times deeper then stem travel – for greater protection against leakage

JORDANVALVE

Jordan Valve a division of Richards Industries
3170 Wasson Road • Cincinnati, OH 45209
513.533.5600 • 800.543.7311 • 513.871.0105 (f)
info@richardsind.com • www.jordanvalve.com

SPECIFICATIONS

Sizes: (note: 1/4" & 3/8" sizes use 1/2" body with reducers)

- Mark 70/70PG: 1/4" through 2" (DN8 through DN50)
- Mark 76: 1/4" through 6" (DN8 through DN150)
- Mark 707: 1/2" through 6" (DN15 through DN150)
- Mark 711: 2-1/2" through 6" (DN65 through DN150)

End Connections

- Threaded (NPT, BSPT, BSPP – through 2" (DN50) sizes)
- ANSI Flanges (150#, 300#)
- DIN Flanges (PN10/16, PN25/40)

Body Materials

- Ductile Iron
- Bronze (1/2" – 2"/ DN15 – DN50)
- Carbon Steel (WCB)
- Stainless Steel (CF8M)

Trim Materials

- 303SS for CI and DI body valves
- 316SS for SS body valves

Seat Materials

- Jorcote on SST – standard
- Jorcote/Jordanic on SST – for severe service
- Chrome Plated SST – option for light duty service (1/2" – 2"/ DN15 – DN50 only)

Yoke Material: Cast Iron

Actuator: Steel

Diaphragm: Buna-N (standard to 200°F, 93,3°C)

Stem Packing: spring-loaded Teflon (to 450°F; 232°C); Graphite (to 1200°F; 649°C)

Service: Steam, water, oil, gas, air and chemicals

Shutoff: ANSI Class IV

Ranges

- Mark 70/707/711: 3-15, 3-9, 9-15, 6-30 psi (0,21-1,03; 0,21-0,62; 0,62-1,03; 0,41-2,07 bar)
- Mark 76: on/off – operated with 20 psi (1,4 bar) for 1/2" through 2" sizes (DN15 through DN50); 50 psi (3,5 bar) for 2-1/2" through 6" sizes (DN65 through DN150)
- Mark 70PG: consult factory for ranges

Action

- Direct (air signal closes valve)
- Reverse (air signal opens valve)

Positioner: side or top-mounted positioners are available to overcome the normal hysteresis for a control valve and actuator, and to ensure that the valve stem position is always directly proportional to the control valve command signal. See the Positioner section for more details.

Rangeability

- MK70: 1/2" – 1-1/2" (DN15 – DN40) 100:1
- MK70: 2" (DN50) >200:1
- MK711: 2-1/2" – 3" (DN65 – DN80) >200:1
- MK711: 4" – 6" (DN100 – DN150) 100:1
  MK707: all sizes 100:1

TAMO
01895 200015
sales@tamo.co.uk

CV VALUES AND MAXIMUM ALLOWABLE DIFFERENTIAL PRESSURE RATINGS

- Mark 70

Flow Coef.		Valve Size (DN)	Seat Material	Maximum Differential Presure									
				Std. 35M Actuator		35M w/Positioner		Optional 55M Actuator		55M w/Positioner		Optional 85M Actuator	
Cv	Kv			PSI	BAR	PSI	BAR	PSI	BAR	PSI	BAR	PSI	BAR
2.5 or 4.4	2,2 or 3,8	1/2" & 3/4" (DN15 & 20)	SST	125	8,6	175	12,1	175	12,1	175	12,1	175	12,1
			Jorcote	250	17,2	500	34,5	350	24,1	700	48,3	550	37,9
6.4 or 9.5	5,5 or 8,2	1" & 1-1/4" (DN25 & 32)	SST	100	6,9	150	10,3	150	10,3	150	10,3	150	10,3
			Jorcote	150	10,3	300	20,7	215	14,8	425	29,3	350	24,1
15	12,9	1-1/2" (DN40)	SST	75	5,2	125	8,6	100	6,9	125	8,6	125	8,6
			Jorcote	125	8,6	250	17,2	175	12,1	350	24,1	275	19,0
25 or 30	21,5 or 25,8	2" (DN50)	SST	75	5,2	125	8,6	100	6,9	125	8,6	125	8,6
			Jorcote	125	8,6	250	17,2	175	12,1	350	24,1	275	19,0

Based on 45 psi (3,1 bar) to actuator or psi

- Mark 76 — Standard Actuator: 1/2" – 2": 506; 2-1/2" – 6" 35M

Flow Coef.		Valve Size (DN)	Seat Material	Maximum ΔP	
Cv	Kv			PSI	BAR
2.5 or 4.4	2,2 or 3,8	1/2" & 3/4" (DN15 & 20)	SST	125	8,6
			Jorcote	400	27,6
6.4 or 9.5	5,5 or 8,2	1" & 1-1/4" (DN25 & 32)	SST	100	6,9
			Jorcote	250	17,2
15	12,9	1-1/2" (DN40)	SST	75	5,2
			Jorcote	175	12,1
25 or 30	21,5 or 25,8	2" (DN50)	SST	75	5,2
			Jorcote	175	12,1
85	73,1	2-1/2" (DN65)	Jorcote	100	6,9
130	112	3" (DN80)	Jorcote	100	6,9
200	172	4" (DN100)	Jorcote	75	5,2
395	340	6" (DN150)	Jorcote	75	5,2

- Mark 711 — Standard Actuator: 2-1/2" – 3": 55M; 4" – 6" 85M

Flow Coef.		Valve Size (DN)	Seat Material	Maximum ΔP, PSI*			
				Standard		w/Positioner	
Cv	Kv			PSI	BAR	PSI	BAR
85	73	2-1/2" (DN65)	Jorcote	50	3,5	275	19
130	112	3" (DN80)	Jorcote	50	3,5	275	19
200	172	4" (DN100)	Jorcote	50	3,4	325	22
			Jorcote	50	3,4	225	16

* Higher ΔP's available with optional larger actuators

- Mark 707 — Standard Actuator: 1/2" – 3/4": 35M; 2-1/2" – 6" 85M

Flow Coef.		Valve Size (DN)	Seat Material	Maximum ΔP*			
				Standard Actuator		w/Positioner	
Cv	Kv			PSI	BAR	PSI	BAR
2.5	2,2	1/2" (DN15)	Jorcote	250	17,2	500	34,5
4.4, 6.4 or 9.5	3,8, 5,5 or 8,2	3/4" (DN20)	Jorcote	150	10,3	300	20,7
11.5	9,9	1" (DN25)	SST	100	6,9	175	6,9
			Jorcote	150	10,3	300	13,8
13	11,2	1-1/4" (DN32)	SST	100	6,9	175	6,9
			Jorcote	150	10,3	300	13,8
22	18,9	1-1/2" (DN40)	SST	100	6,9	150	6,9
			Jorcote	150	10,3	150	10,3
34	29,2	2" (DN50)	SST	100	6,9	150	6,9
			Jorcote	150	10,3	150	10,3
60	51,6	2-1/2" (DN65)	Jorcote	80	5,5	275	19,0
80	68,8	3" (DN80)	Jorcote	80	5,5	275	19,0
130	112	4" (DN100)	Jorcote	50	3,5	225	15,5
230	198	6" (DN150)	Jorcote	50	3,5	150	10,3

Low Flow: reduced Cv's/Kv's can be used in any size valve as long as it is a smaller value than is standard for that size. In addition, these low flow Cv's/Kv's can be provided:

1.6	0.84	0.42	0.21	0.08	0.04
0,02	0,008	0,004	0,002	0,0008 (N/A in 316SS)	

MAXIMUM WORKING PRESSURES & TEMPERATURES

- Mark 70 & Mark 707 (1/2" – 2") (DN15 – DN50)

Maximum Pressure @ 100°F, PSI/°F												
Packing	DI Body			BRZ Body			CS Body			SST Body		
	150#	300#	TE	150#	300#	TE	150#	300#	TE	150#	300#	TE
Any	250	640	988	225	500	500	285	740	1480	275	720	1440
Pressure @ Maximum Temperature, PSI/°F												
TEF	170/500	495/500	808/500	150/500	325/500	325/500	170/500	600/500	1200/500	170/500	480/500	955/500
GRAF	125/650	450/650	715/650	150/500	325/500	325/500	125/650	535/650	1075/650	125/650	445/650	890/650

Maximum Pressure @ 38°C, BAR/°C												
Packing	DI Body			BRZ Body			CS Body			SST Body		
	150#	300#	TE	150#	300#	TE	150#	300#	TE	150#	300#	TE
Any	17	44	68	16	34	34	20	51	102	19	50	99
Pressure @ Maximum Temperature, BAR/°C												
TEF	12/260	34/260	56/260	10/260	22/260	22/260	12/260	41/260	83/260	12/260	33/260	66/260
GRAF	9/343	31/343	49/343	10/343	22/343	22/343	9/343	37/343	74/343	9/343	31/343	61/343

- Mark 711 & Mark 707 (2-1/2" – 6") (DN65 – DN150)

Maximum Pressure @ 100°F, PSI/°F												
Packing	DI Body			BRZ Body			CS Body			SST Body		
	150#	300#	TE	150#	300#	TE	150#	300#	TE	150#	300#	TE
Any	250	640	—	—	—	—	285	740	—	275	720	—
Pressure @ Maximum Temperature, PSI/°F												
TEF	170/500	495/500	—	150/500	325/500	—	170/500	600/500	—	170/500	480/500	—
GRAF	125/650	450/650	—	150/500	325/500	—	125/650	535/650	—	125/650	445/650	—

Maximum Pressure @ 38°C, BAR/°C												
Packing	DI Body			BRZ Body			CS Body			SST Body		
	150#	300#	TE	150#	300#	TE	150#	300#	TE	150#	300#	TE
Any	17	44	—	—	—	—	20	51	—	19	50	—
Pressure @ Maximum Temperature, BAR/°C												
TEF	12/260	34/260	—	10/260	22/260	—	12/260	41/260	—	12/260	33/260	—
GRAF	9/343	31/343	—	10/343	22/343	—	9/343	37/343	—	9/343	31/343	—

- Mark 76

		Maximum Pressure @ 100°F, PSI/°F											
Size	Packing	DI Body			BRZ Body			CS Body			SST Body		
		150#	300#	TE	150#	300#	TE	150#	300#	TE	150#	300#	TE
1/2" to 2"	Any	250	640	988	225	500	500	285	740	1480	275	720	1440
2-1/2" to 6"	Any	250	640	—	—	—	—	285	740	—	275	720	—
		Pressure @ Maximum Temperature, PSI/°F											
Any	TEF	170/500	495/500	808/500	150/500	325/500	325/500	170/500	600/500	1200/500	170/500	480/500	955/500
	GRAF	125/650	450/650	715/650	150/500	325/500	325/500	125/650	535/650	1075/650	125/650	445/650	890/650

		Maximum Pressure @ 100°F, PSI/°F											
Size	Packing	DI Body			BRZ Body			CS Body			SST Body		
		150#	300#	TE	150#	300#	TE	150#	300#	TE	150#	300#	TE
DN15-50	Any	17	44	68	225	16	34	20	51	102	19	50	99
DN65-150	Any	17	44	—	—	—	—	20	51	—	19	50	—
		Pressure @ Maximum Temperature, PSI/°F											
Any	TEF	12/260	34/260	56/260	10/260	22/260	22/260	12/260	41/260	83/260	12/260	33/260	66/260
	GRAF	9/343	31/343	49/343	10/260	22/260	22/260	9/343	37/343	74/343	9/343	31/343	61/343

PRESSURE-TEMPERATURE CHARTS – MK70, MK74, MK76

- Ductile Iron

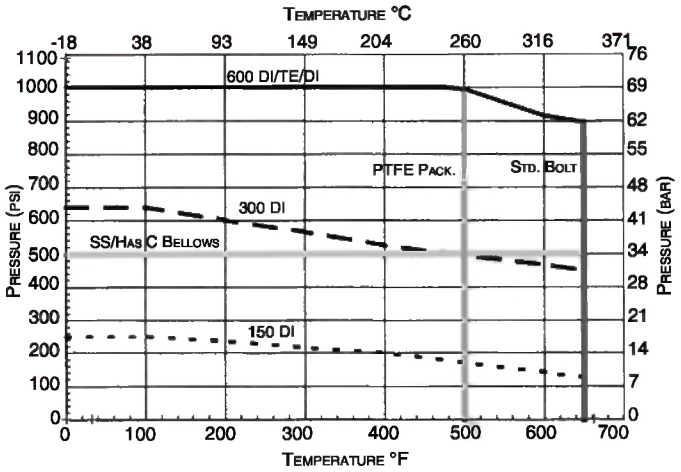

- Stainless Steel

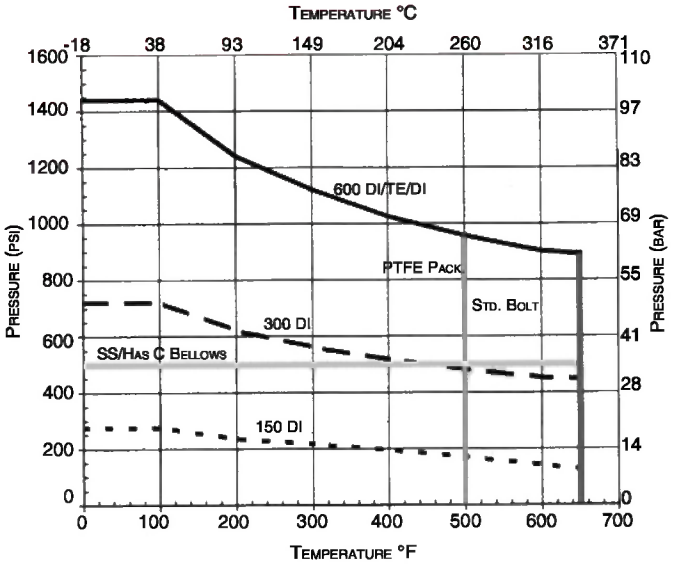

- Carbon Steel

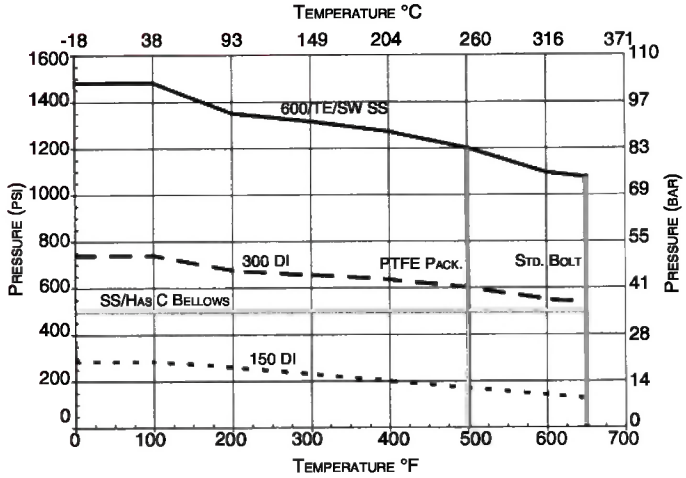

- Cast Iron

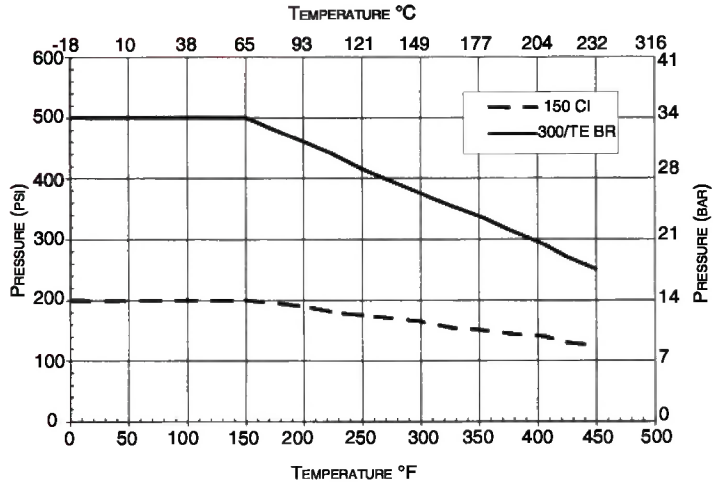

- Bronze

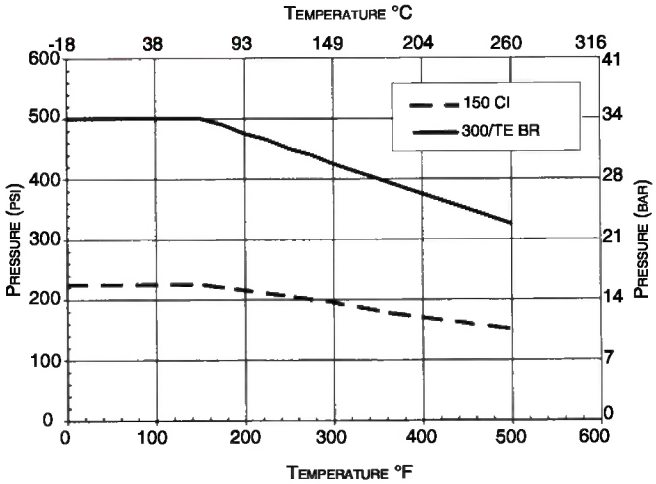

DIMENSIONS

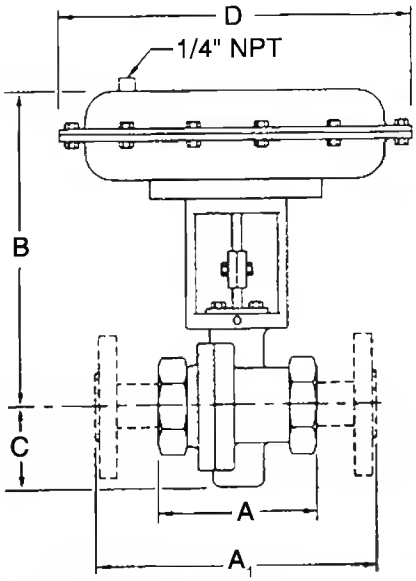

- Mark 70: Flanged Ends

Size	ANSI Flange	Dimensions (inches)				Weight (lbs)
		A_1	B	C	D	
1/2"	150#	7.25	9.38	2.18	9.50	26
	300#	7.50	9.38	2.18	9.50	28
3/4"	150#	7.25	9.38	2.18	9.50	26
	300#	7.62	9.38	2.18	9.50	28
1"	150#	7.25	9.62	2.62	9.50	30
	300#	7.75	9.62	2.62	9.50	32
1-1/4"	150#	7.87	9.87	2.62	9.50	28
	300#	8.37	9.87	2.62	9.50	30
1-1/2"	150#	8.75	9.87	2.75	9.50	30
	300#	9.25	9.87	2.75	9.50	32
2"	150#	10.00	10.00	3.00	9.50	34
	300#	10.50	10.00	3.00	9.50	36

- Mark 70: Flanged Ends, DIN

Size	ANSI PN	Dimensions (mm)				Weight (kgs)
		A_1	B	C	D	
DN15	10/16	130	238	55	241	11,8
	25/40	130	238	55	241	12,7
DN20	10/16	150	238	55	241	11,8
	25/40	150	238	55	241	12,7
DN25	10/16	160	244	67	241	12,7
	25/40	160	244	67	241	13,6
DN32	10/16	180	251	67	241	12,7
	25/40	180	251	67	241	13,6
DN40	10/16	200	251	70	241	13,6
	25/40	200	251	70	241	14,5
DN50	10/16	230	254	76	241	14,8
	25/40	230	254	76	241	16,3

- Mark 70: Threaded Ends

Size	Material	Dimensions (inches)				Weight (lbs)
		A	B	C	D	
1/2" & 3/4"	DI/BRZ	3.62	9.38	2.18	9.50	24
	CS/SS	3.65	9.38	2.18	9.50	24
1"	DI/BRZ	4.12	9.62	2.62	9.50	26
	CS/SS	4.12	9.62	2.62	9.50	28
1-1/4"	DI/BRZ	4.12	9.87	2.62	9.50	26
1-1/2"	DI/BRZ	4.50	9.87	2.62	9.50	27
	CS/SS	4.65	9.87	2.75	9.50	28
2"	DI/BRZ	4.50	10.00	2.62	9.50	29
	CS/SS	5.50	10.00	3.00	9.50	32

- Mark 70: Threaded Ends, DIN

Size	Material	Dimensions (mm)				Weight (kgs)
		A	B	C	D	
DN15 & 20	DI/BRZ	92	238	55	241	10,9
	CS/SS	93	238	55	241	10,9
DN25	DI/BRZ	105	244	67	241	11,8
	CS/SS	105	244	67	241	12,7
DN32	DI/BRZ	105	251	67	241	11,8
DN40	DI/BRZ	114	251	67	241	12,2
	CS/SS	118	251	70	241	12,7
DN50	DI/BRZ	114	254	67	241	13,2
	CS/SS	140	254	76	241	14,5

- Mark 76: Flanged Ends

Size	ANSI Flange	Dimensions (inches)				Weight (lbs)
		A_1	B	C	D	
2-1/2"	125/150#	10.87	16.50	5.12	9.50	180
	250/300#	11.50				
3"	125/150#	11.75	16.50	5.37	9.50	195
	250/300#	12.50				
4"	125/150#	13.87	17.75	6.00	9.50	305
	250/300#	14.50				
6"	125/150#	17.75	18.50	7.00	9.50	380
	250/300#	18.62				

- Mark 76: Flanged Ends, DIN

Size	ANSI PN	Dimensions (mm)				Weight (kgs)
		A_1	B	C	D	
DN65	10/16	276	419	130	241	82
	25/40	290				
DN80	10/16	298	419	136	241	88
	25/40	310				
DN100	10/16	350	451	152	241	138
	25/40	368				
DN150	10/16	451	470	178	241	172
	25/40	480				

DIMENSIONS

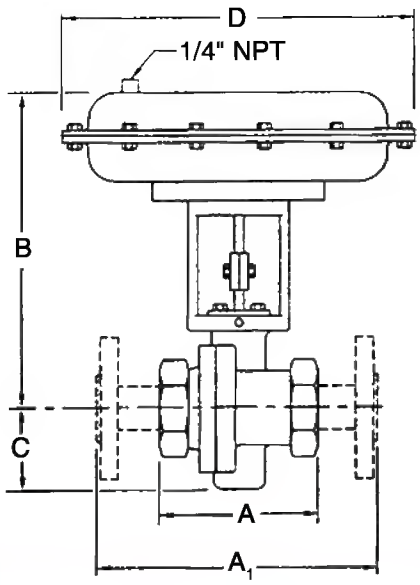

- Mark 76: Threaded Ends

Size	Material	Dimensions (inches)				Weight (lbs)
		A	B	C	D	
1/2"	DI/BRZ	3.62	5.25	2.18	5.00	10
	CS/SS	3.65	5.25	2.18	5.00	10
3/4"	DI/BRZ	3.62	5.25	2.18	5.00	10
	CS/SS	3.65	5.25	2.18	5.00	10
1"	DI/BRZ	4.12	5.50	2.62	5.00	12
	CS/SS	4.12	5.50	2.62	5.00	13
1-1/4"	DI/BRZ	4.12	5.50	2.62	5.00	12
1-1/2"	DI/BRZ	4.50	5.75	2.62	5.00	13
	CS/SS	4.65	6.00	2.75	5.00	14
2"	DI/BRZ	4.50	5.87	2.62	5.00	15
	CS/SS	5.50	6.12	3.00	5.00	18

- Mark 76: Threaded Ends, DIN

Size	Material	Dimensions (mm)				Weight (kgs)
		A	B	C	D	
DN15	DI/BRZ	92	133	55	127	5,4
	CS/SS	93	133	55	127	5,4
DN20	DI/BRZ	92	133	55	127	5,4
	CS/SS	93	133	55	127	5,4
DN25	DI/BRZ	105	140	67	127	6,4
	CS/SS	105	140	67	127	6,8
DN32	DI/BRZ	105	140	67	127	6,4
DN40	DI/BRZ	114	146	67	127	6,8
	CS/SS	118	152	70	127	7,3
DN50	DI/BRZ	114	149	67	127	7,7
	CS/SS	140	155	76	127	9,1tt

- Mark 707: Threaded Ends

Size	Material	Dimensions (inches)				Weight (lbs)
		A	B	C	D	
1/2"	DI/BRZ	3.62	9.38	2.18	9.50	24
	CS/SS	3.65	9.38	2.18	9.50	24
3/4"	DI/BRZ	4.12	10.82	2.62	12.50	37
	CS/SS	4.12	10.82	2.62	12.50	39
1"	DI/BRZ	4.12	10.82	2.62	12.50	37
	CS/SS	4.12	10.82	2.62	12.50	39
1-1/4"	DI/BRZ	4.12	11.07	2.62	12.50	37
1-1/2"	DI/BRZ	4.50	11.07	2.62	12.50	40
	CS/SS	4.65	11.20	3.00	12.50	43
2"	DI/BRZ	4.50	11.20	2.62	12.50	40
	CS/SS	5.50	11.20	3.00	12.50	43

- Mark 707: Threaded Ends, DIN

Size	Material	Dimensions (mm)				Weight (kgs)
		A	B	C	D	
DN15	DI/BRZ	92	238	55	241	11
	CS/SS	93	238	55	241	11
DN20	DI/BRZ	105	205	67	318	17
	CS/SS	105	275	67	318	18
DN25	DI/BRZ	105	205	67	318	17
	CS/SS	105	275	67	318	18
DN32	DI/BRZ	105	281	67	318	17
DN40	DI/BRZ	114	281	67	318	18
	CS/SS	140	284	76	318	20
DN50	DI/BRZ	114	284	67	318	18
	CS/SS	140	284	76	318	20

- Mark 707 & Mark 711: Flanged Ends

Size	ANSI Flange	Dimensions (inches)				Weight (lbs)
		A_1	B	C	D	
2-1/2"	125/150#	10.87	19.50	5.12	15.00	210
	250/300#	11.50				
3"	125/150#	11.75	19.50	5.37	15.00	255
	250/300#	12.50				
4"	125/150#	13.87	20.75	6.00	15.00	325
	250/300#	14.50				
6"	125/150#	17.75	21.50	7.00	15.00	410
	250/300#	18.62				

- Mark 707 & Mark 711: Flanged Ends, DIN

Size	ANSI PN	Dimensions (mm)				Weight (kgs)
		A_1	B	C	D	
DN65	10/16	276	495	130	381	95
	25/40	290				
DN80	10/16	298	495	136	381	102
	25/40	310				
DN100	10/16	350	527	152	381	152
	25/40	368				
DN150	10/16	451	546	178	381	186
	25/40	480				

ORDERING SCHEMATIC

Model No	Size	Body Mat'l	/	1	2	3	4	5	6	7	8	9	10	11	12	13	14	15

	Model
70	Standard
70SP	Standard with Side Positioner
70TP	Standard with Top Positioner
707	Equal Percentage
707SP	Equal Percentage with Side Positioner
707TP	Equal Percentage with Top Positioner
711	Linear
711SP	Linear with Side Positioner
711TP	Linear with Top Positioner

	Size		
050	1/2" (DN15)	150	1-1/2" (DN40)
075	3/4" (DN20)	200	2" (DN50)
100	1" (DN25)	250	2-1/2" (DN65)
125	1-1/4" (DN32)	300	3" (DN80)

	Body Material
DI	Ductile Iron
BR	Bronze
CS	Carbon Steel (WCB)
S6	Stainless Steel (CF8M)

1 & 2	End Connections
PT	NPT
BT	BSPT
I5	150# IFE DI above 2" or CS or SST valves
F5	150# FE DI below 2-1/2" or BR
I7	PN10 IFE DI above 2" or CS or SST valves
F7	PN10 FE DI below 2-1/2" or BR
I6	PN16 IFE DI above 2" or CS or SST valves
F6	PN16 FE DI below 2-1/2" or BR
BP	BSPP
SW	FSW
I3	300# IFE DI above 2" or CS or SST valves
F3	300# FE DI below 2-1/2" or BR
I8	PN25 IFE DI above 2" or CS or SST valves
F8	PN25 FE DI below 2-1/2" or BR
I4	PN40 IFE DI above 2" or CS or SST valves
F4	PN40 FE DI below 2-1/2" or BR

3 & 4	Trim
T3	303SS/TFE Pkg
T6	316SS/TFE Pkg
I3	303SS/Graphite
I6	316SS/Graphite

5	Seat Material
A	303SST
B	316SST
V	303SS/Jorcote
W	316SS/Jorcote
X	303SS/JOR/JIC
Y	316SS/JOR/JIC

6	Cv (Kv)				
	MK70 & MK711			MK707	
1	0.21 (0,28)	A	25 (22)	5	2.5 (2,2)
2	0.42 (0,36)	B	30 (26)	6	4.4 (3,8)
3	0.84 (0,72)	C	50 (43)	N	11.5 (9,9)
4	1.6 (1,4)	F	85 (73)	P	13 (11,2)
5	2.5 (2,2)	G	115 (99)	S	22 (19)
6	4.4 (3,8)	H	130 (112)	U	34 (29)
7	6.4 (5,5)	I	200 (172)	1	60 (52)
8	9.5 (8,2)	J	395 (341)	2	80 (69)
9	15 (13,0)			H	130 (112)
				3	230 (199)

7,8,9,10,11,12	Mark 70 Series Range & Actuator	
	Range	Actuator
N3Q3N3	3-15 DIR	35M
Q3Q3N3	3-15 REV	

7,8,9,10,11,12	All Mark 70 Models Range & Actuator	
	Range	Actuator
A3B3A3	3-15 DIR	35M
B3B3A3	3-15 REV	
G3B3A3	6-30 DIR	
H3B3A3	6-30 REV	
A5B5A5	3-15 DIR	55M
B5B5A5	3-15 REV	
G5B5A5	6-30 DIR	
H5B5A5	6-30 REV	
A8B8A8	3-15 DIR	85M
B8B8A8	3-15 REV	
G8B8A8	6-30 DIR	
H8B8A8	6-30 REV	

13 & 14	Accessories
00	None
AR	Air Regulator
H3	Handwheel 35M Actuator
H5	Handwheel 55M Actuator
H8	Handwheel 85M Actuator
S6	316SS Bolting

15	Action
D	Air-to-Close
R	Air-to-Open

Mark 701/702 Series

High-Flow and Super High-Flow Control Valves

The Mark 701/702 high-flow and super high-flow sliding gate control valves provide:

- Shorter Stroke than a globe or plug-style valve
  - Faster response
  - Longer packing and seat life
  - Stem packing is four times deeper than stem travel – for greater protection against leakage
  - Smaller and lighter weight than globe-style valves
- Straight through flow
  - Less turbulence, erosion and noise
  - Fewer spare parts
  - Self-cleaning seats
  - No gaskets or o-rings
- Ease of maintenance
  - Interchangeable seats and Cv's
  - Fewer spare parts
  - Self-cleaning seats
  - No gaskets or o-rings

Specifications

Sizes: 1/2" through 2" (DN15 through DN50)

End Connections
- Threaded (NPT, BSPT, BSPP)
- ANSI Flanges (150#, 300#)
- DIN Flanges (PN10/16, PN25/40)

Body Materials
- Ductile Iron
- Bronze
- Carbon Steel (WCB)
- Stainless Steel (CF8M)

Trim Materials
- 303SS for CI, DI, BRZ & CS body valves
- 316SS for SS body valves

Seat Materials
- Jorcote on SST – standard
- Jorcote/Jordanic on SST – for severe service
- Chrome Plated SST – economical option for light duty service

Yoke: Cast Iron

Actuator: Steel

Diaphragm: Buna-N (standard, to 200°/93°C)

Stem Packing: Spring-loaded Teflon (to 450°F/232°C); Graphite (to 1200°F/649°C)

Service: steam, water, oil, gas, air and chemicals

Shutoff: ANSI Class IV

Ranges: 3-15, 3-9, 9-15, 6-30 psi (0,21-1,03; 0,21-0,62; 0,62-1,03; 0,41-2,1 bar)

Action
- Direct (air signal closes valve)
- Reverse (air signal opens valve)

Positioner: Side or top mounted positioners are available to ensure that the valve stem position is always directly proportional to the control system output signal. See the Positioner section for more details.

Body Rating
- Ductile Iron up to 988 psi (68,1 bar) @ 100°F (38°C) and 715 psi (49,3 bar) @ 650°F (343°C)
- Carbon Steel and Stainless Steel up to 1440 psi (99 bar) @ 100°F (38°C) and 890 psi (61 bar) @ 650°F (343°C)
- Bronze up to 500 psi (35 bar) @ 100°F (38°C) and 325 psi (22 bar) @ 500°F (260°C)
- Temperature limit of -20°F (-29°C) on all materials; for other temperatures, consult factory

Cv Values and Maximum Allowable Differential Pressure Ratings

Cv (Kv)	Valve Size (DN)	Seat Material	Max ΔP, PSI * (BAR)	
			55M Actuator	35M w/Positioner
6.4 (5,5)	1/2" & 3/4" (DN15 & 20)	SST	125 (8,6)	150 (10,3)
		Jorcote	200 (13,8)	250 (17,2)
70. (6,0)	1/2" (DN15)	SST	125 (8,6)	150 (10,3)
		Jorcote	200 (13,8)	250 (17,3)
9.5 (8,2)	3/4" (DN20)	SST	125 (8,6)	150 (10,3)
		Jorcote	200 (13,8)	250 (17,2)
15 (12,9)	1" & 1-1/4" (DN25 & 32)	SST	100 (6,9)	100 (6,9)
		Jorcote	150 (10,3)	200 (13,8)
18 (15,5)	1" (DN25)	SST	100 (6,9)	100 (6,9)
		Jorcote	150 (10,3)	200 (13,8)
25 (22)	1-1/4" (DN32)	SST	100 (6,9)	100 (6,9)
		Jorcote	150 (10,3)	200 (13,8)
30 (26)	1-1/2" & 2" (DN40 & 50)	SST	100 (6,9)	100 (6,9)
		Jorcote	150 (10,3)	200 (13,8)
45 (39)	1-1/2" (DN40)	SST	100 (6,9)	100 (6,9)
		Jorcote	150 (10,3)	200 (13,8)
50 (43)	2" (DN50)	SST	150 (6,9)	100 (6,9)
		Jorcote	150 (10,3)	200 (13,8)
65 (56)	1-1/2" (DN40)	SST	100 (6,9)	125 (8,6)
		Jorcote	150 (10,3)	150 (10,3)
70 (61)	2" (DN50)	SST	100 (6,9)	125 (8,6)
		Jorcote	150 (10,3)	150 (10,3)

TAMO
01895 200015
sales@tamo.co.uk

DIMENSIONS

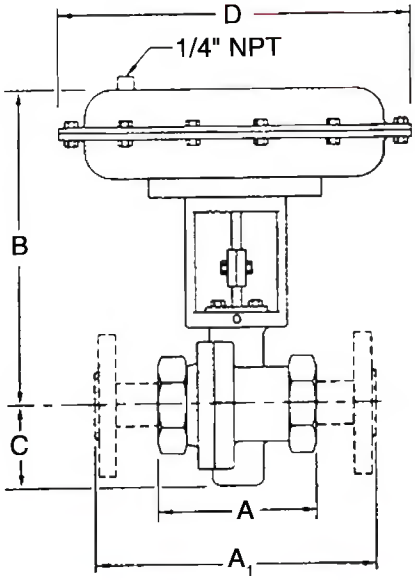

- Mark 701/702: Flanged Ends

Size	ANSI Flange	Dimensions (inches)				Weight (lbs)
		A_1	B	C	D	
1/2"	150#	7.25	10.38	2.18	12.5	37
	300#	7.50	10.38	2.18	12.5	39
3/4"	150#	7.25	10.38	2.18	12.5	41
	300#	7.62	10.38	2.18	12.5	45
1"	150#	7.25	10.62	2.62	12.5	41
	300#	7.75	10.62	2.62	12.5	45
1-1/4"	150#	7.87	10.87	2.62	12.5	41
	300#	8.37	10.87	2.62	12.5	45
1-1/2"	150#	8.75	10.87	2.75	12.5	46
	300#	9.25	10.87	2.75	12.5	55
2"	150#	10.00	11.00	3.00	12.5	50
	300#	10.50	11.00	3.00	12.5	57

- Mark 701/702: Threaded Ends

Size	Material	Dimensions (inches)				Weight (lbs)
		A	B	C	D	
1/2"	DI/BRZ	3.62	10.38	2.18	12.50	35
	CS/SS	3.65	10.38	2.18	12.50	35
3/4"	DI/BRZ	3.62	10.38	2.18	12.50	35
	CS/SS	3.65	10.38	2.18	12.50	35
1"	DI/BRZ	4.12	10.62	2.62	12.50	37
	CS/SS	4.12	10.62	2.62	12.50	39
1-1/2"	DI/BRZ	4.50	10.87	2.62	12.50	40
	CS/SS	5.00	10.87	3.00	12.50	43
2"	DI/BRZ	4.50	11.00	2.62	12.50	40
	CS/SS	5.50	11.00	3.00	12.50	43

- Mark 701/702: Flanged Ends, DIN

Size	ANSI PN	Dimensions (mm)				Weight (kgs)
		A_1	B	C	D	
DN15	10/16	130	263	55	318	16,8
	25/40	130	263	55	318	17,7
DN20	10/16	150	263	55	318	18,6
	25/40	150	263	55	318	20,4
DN25	10/16	160	270	67	318	18,6
	25/40	160	270	67	318	20,4
DN32	10/16	180	276	67	318	18,6
	25/40	180	276	67	318	20,4
DN40	10/16	200	276	70	318	20,9
	25/40	200	276	70	318	24,9
DN50	10/16	230	284	76	318	22,7
	25/40	230	284	76	318	25,9

- Mark 701/702: Threaded Ends, DIN

Size	Material	Dimensions (mm)				Weight (kgs)
		A	B	C	D	
DN15	DI/BRZ	92	264	55	318	16
	CS/SS	93	264	55	318	16
DN20	DI/BRZ	92	264	55	318	16
	CS/SS	93	264	55	318	16
DN25	DI/BRZ	105	270	67	318	17
	CS/SS	105	270	67	318	18
DN40	DI/BRZ	114	284	67	318	18
	CS/SS	140	284	76	318	20
DN50	DI/BRZ	114	284	67	318	18
	CS/SS	140	284	76	318	20

PRESSURE-TEMPERATURE CHARTS – MK701/702

- Ductile Iron

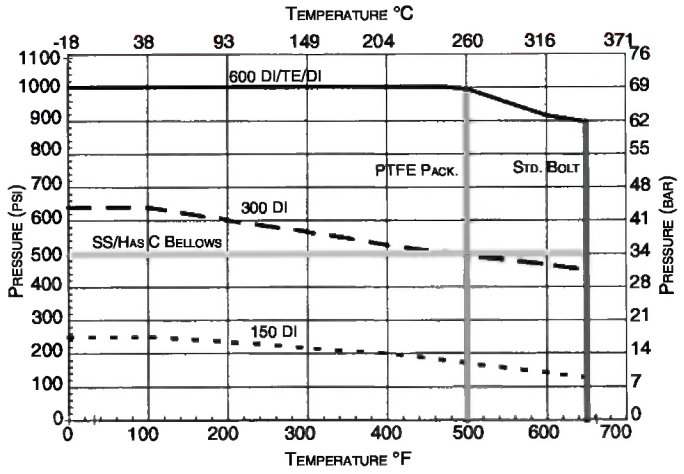

- Stainless Steel

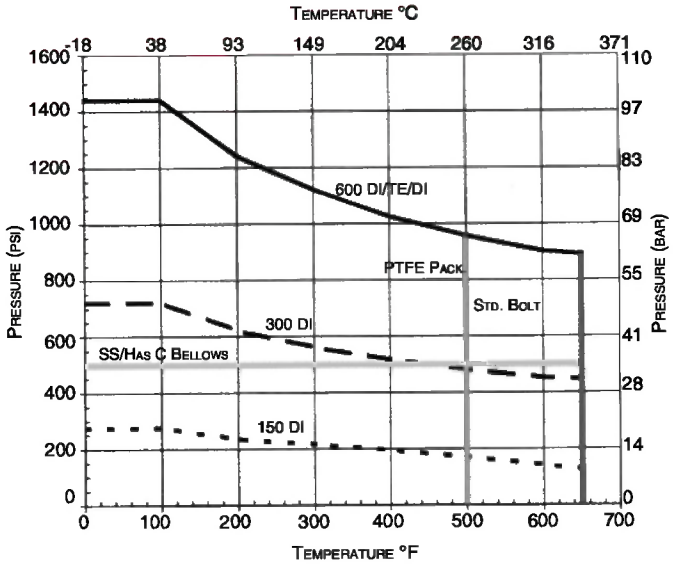

- Carbon Steel

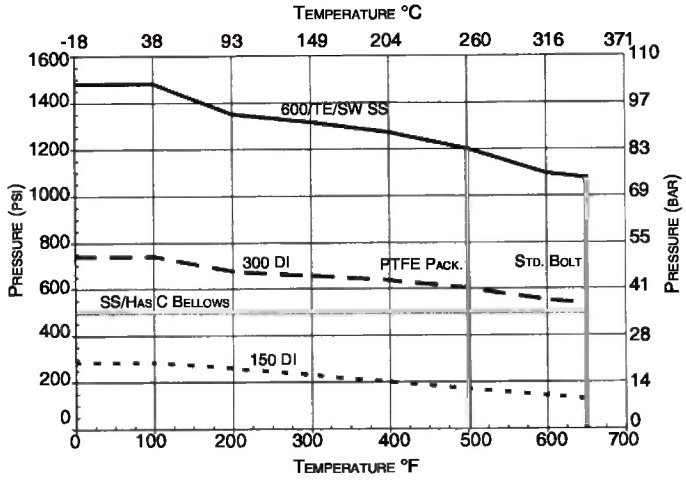

- Bronze

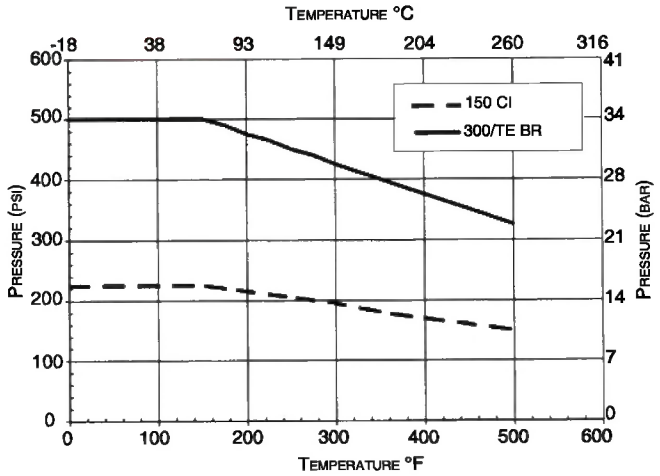

ORDERING SCHEMATIC

Model No	Size	Body Mat'l	/	1	2	3	4	5	6	7	8	9	10	11	12	13	14	15	16

	Model
701	High Flow
701TP	High Flow with Top Positioner
702	Super High Flow
702TP	Super High FLow with Top Positioner

	Size
050	1/2" (DN15)
075	3/4" (DN20)
100	1" (DN25)
125	1-1/4" (DN32)
150	1-1/2" (DN40)
200	2" (DN50)

	Body Material
DI	Ductile Iron
BR	Bronze
CS	Carbon Steel (WCB)
S6	Stainless Steel (CF8M)

1 & 2	End Connections
PT	NPT
BT	BSPT
I5	150# IFE DI above 2" or CS or SST valves
F5	150# FE DI below 2-1/2" or BR
I7	PN10 IFE DI above 2" or CS or SST valves
F7	PN10 FE DI below 2-1/2" or BR
I6	PN16 IFE DI above 2" or CS or SST valves
F6	PN16 FE DI below 2-1/2" or BR
BP	BSPP
SW	FSW
I3	300# IFE DI above 2" or CS or SST valves
F3	300# FE DI below 2-1/2" or BR
I8	PN25 IFE DI above 2" or CS or SST valves
F8	PN25 FE DI below 2-1/2" or BR
I4	PN40 IFE DI above 2" or CS or SST valves
F4	PN40 FE DI below 2-1/2" or BR

3 & 4	Trim
T3	303SS/TFE Pkg
T6	316SS/TFE Pkg

5	Seat Material
A	303SST
B	316SST
V	303SS/Jorcote
W	316SS/Jorcote

6	Cv (Kv)		
K	6.1 (5,3)	T	24 (21)
7	6.4 (5,5)	A	25 (22)
L	7.0 (6,0)	B	30 (26)
M	9.0 (7,8)	V	35 (31)
8	9.5 (8,2)	W	45 (39)
Q	14 (12)	C	50 (43)
9	15 (13)	Y	65 (56)
R	18 (15,5)	E	70 (60)

7,8,9,10,11,12	Range & Actuator	
	Range	Actuator
A3B3A3	3-15 DIR	35M
B3B3A3	3-15 REV	
G3B3A3	6-30 DIR	
H3B3A3	6-30 REV	
A5B5A5	3-15 DIR	55M
B5B5A5	3-15 REV	
G5B5A5	6-30 DIR	
H5B5A5	6-30 REV	
A8B8A8	3-15 DIR	85M
B8B8A8	3-15 REV	
G8B8A8	6-30 DIR	
H8B8A8	6-30 REV	

13 & 14	Accessories
00	None
AR	Air Regulator
H3	Handwheel 35M Actuator
H5	Handwheel 55M Actuator
H8	Handwheel 85M Actuator
S6	316SS Bolting

15	Action
D	Air-to-Close
R	Air-to-Open

16	I/P
0	None
3	I/P 35M Actuator
5	I/P 55M Actuator
8	I/P 85M Actuator

Mark 74 Series

Bellows Seal Control Valve

When dealing with clean air requirements, you need to feel confident that you will receive long-term, leak-free performance from your bellows stem seal valves. You will find this assurance with the Mark 74 from Jordan Valve. The Mark 74 provides exceptional bellows life with a valve stroke that is just a fraction of that of other rising stem valves. This means Jordan Valve can use a smaller formed bellows that has minimal movement during operation. With limited movement, the bellows is not subjected to excessive wear and fatigue – conditions that can quickly lead to failure in other designs. In actual laboratory evaluations the valves tested exceeded two million throttling cycles in Class 300 service with no failures of the SST bellows. You can expect the Mark 74 to provide long-term, dependable service to meet Clean Air requirements.

For compliance with the most stringent requirements of the Clean Air Act, the Mark 74 controls fugitive emissions while reducing the risks associated with toxic, corrosive, explosive and high temperature fluids.

Features

- Long bellows life – in actual lab tests, the Mark 74 exceeded 2 million cycles with no bellows failures
- Short stroke – with a valve stroke that's just a fraction of that of other rising stem valves, the Mark 74 uses a smaller bellows that has minimal movement during operation. With limited movement, the bellows is not subjected to excessive wear and fatigue, conditions that can quickly lead to failure in other valve designs.
- Fully packed back-up seal – for additional assurance, a secondary chamber of multiple packing rings provides extra leakage protections
- Detection/monitoring port – a gauge can be mounted to verify bellows performance
- Totally enclosed multi-spring actuator – minimizes deadband and is field reversible without the use of special tools or additional parts
- Specialty alloys available – ideal for toxic or corrosive services

Specifications

Sizes: 1/2" through 2" (DN15 through DN50)

End Connections
- Threaded (NPT, BSPT, BSPP)
- ANSI Flanges (150#, 300#)
- DIN Flanges (PN10/16, PN25/40)

Body Materials
- Ductile Iron
- Bronze
- Carbon Steel (WCB)
- Stainless Steel (CF8M)

Trim Materials
- 303SS – standard for Ductile Iron, Bronze or Carbon Steel valves
- 316SS – standard on Stainless Steel valves

Seat Materials
- Jorcote on SST – standard
- Jorcote/Jordanic on SST – for severe service
- Chrome Plated SST – option for light duty service

SPECIFICATIONS

Bellows
- 316SS
- Hastelloy C

Yoke: Cast Iron

Actuator: Steel

Auxilliary Stem Packing
- Spring-loaded Teflon® (to 500°F/260°C)
- Braided (above 500°F/260°C)

Body Rating: Ductile Iron, Carbon Steel, and Stainless Steel up to 500 psi (34,5 bar) and 650°F (343°c); bronze up to 500 psi (34,5 bar) depending upon specific construction. Temperature limit of -20°F (-28,9°C) on all materials.

Action
- Direct (air-to-close)
- Reverse (air-to-open)

Shutoff: ANSI Class IV

Ranges: controller-operated: 3-15, 3-9, 6-30, 9-15 psi (0,2-1,0; 0,2-0,6; 0,4-2,1; 0,6-1,0 bar)

Positioners: side or top mounted positioners are avilable (specify Mark 74P)

Rangeability
- Mark 74 (1/2" – 1-1/2") (DN15 – DN40): 100:1
- Mark 74 2" (DN50): >200:1

Cv (Kv)	Valve Size (DN)	Seat Material	Max ΔP, PSI * (BAR)	
			Mark 74	Mark 74P
2.5 (2,2) 4.4 (3,8)	1/2" to 3/4" DN8 to 20	SST	125 (8,6)	175 (12,1)
		Jorcote	250 (17,2)	500 (34,5)
6.4 (5,5) 9.5 (8,2)	1" & 1-1/4" DN25 & 32	SST	100 (6,9)	150 (10,3)
		Jorcote	150 (10,3)	300 (20,7)
15 (12,9)	1-1/2" DN40	SST	75 (5,2) 125 (8,6)	125 (8,6) 250 (17,2)
25/30 (22/26)	2" DN50	Jorcote		
High Flow			Mark 741	Mark 741P
30 (26)	1-1/2" & 2" Dn40 & 50	SST	100 (6,9)	125 (8,6)
		Jorcote	150 (10,3)	175 (12,1)
45 (39)	1-1/2" DN40	SST Jorcote	100 (6,9)	125 (8,6)
50 (43)	2" DN50		150 (10,3)	175 (12,1)
Super High Flow			Mark 742	Mark 742P
65 (56)	1-1/2" DN40	SST Jorcote	100 (6,9)	125 (8,6)
70 (60)	2" DN50	SST Jorcote	150 (10,3)	150 (10,3)

TAMO
01895 200015
sales@tamo.co.uk

DIMENSIONS

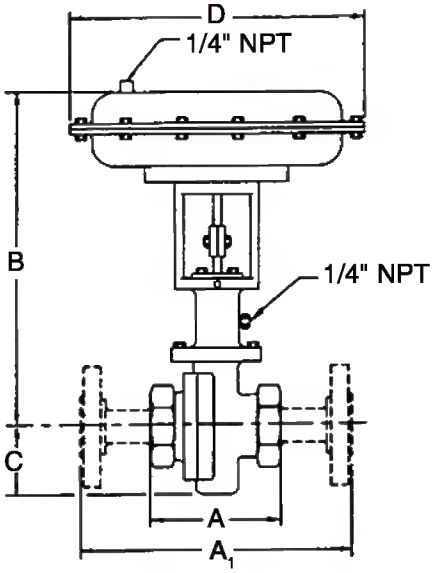

- Mark 74: Flanged Ends

Size	ANSI Flange	Dimensions (inches)				Weight (lbs)
		A_1	B	C	D	
1/2"	150#	7.25	12.38	2.18	9.50	29
	300#	7.50	12.38	2.18	9.50	31
3/4"	150#	7.25	12.38	2.18	9.50	31
	300#	7.62	12.38	2.18	9.50	33
1"	150#	7.25	12.62	2.62	9.50	33
	300#	7.75	12.62	2.62	9.50	36
1-1/4"	150#	7.87	12.87	2.62	9.50	33
	300#	8.37	12.87	2.62	9.50	37
1-1/2"	150#	8.75	12.87	2.75	9.50	36
	300#	9.25	12.87	2.75	9.50	43
2"	150#	10.00	13.00	3.00	9.50	42
	300#	10.50	13.00	3.00	9.50	49

- Mark 74: Flanged Ends, DIN

Size	ANSI PN	Dimensions (mm)				Weight (kgs)
		A_1	B	C	D	
DN15	10/16	130	314	55	241	11,8
	25/40	130	314	55	241	12,7
DN20	10/16	150	314	55	241	11,8
	25/40	150	314	55	241	12,7
DN25	10/16	160	321	67	241	12,7
	25/40	160	321	67	241	13,6
DN32	10/16	180	327	67	241	12,7
	25/40	180	327	67	241	13,6
DN40	10/16	200	327	70	241	13,6
	25/40	200	327	70	241	14,5
DN50	10/16	230	330	76	241	14,8
	25/40	230	330	76	241	16,3

- Mark 74: Threaded Ends

Size	Material	Dimensions (inches)				Weight (lbs)
		A	B	C	D	
1/2" & 3/4"	DI/BRZ	3.62	12.38	2.18	9.50	27
	CS/SS	3.65	12.38	2.18	9.50	27
1"	DI/BRZ	4.12	12.62	2.62	9.50	29
	CS/SS	4.12	12.62	2.62	9.50	30
1-1/4"	DI/BRZ	4.12	12.87	2.62	9.50	29
1-1/2"	DI/BRZ	4.50	12.87	2.62	9.50	30
	CS/SS	4.65	12.87	2.75	9.50	31
2"	DI/BRZ	4.50	13.00	2.62	9.50	32
	CS/SS	5.50	13.00	3.00	9.50	35

- Mark 74: Threaded Ends, DIN

Size	Material	Dimensions (mm)				Weight (kgs)
		A	B	C	D	
DN15 & 20	DI/BRZ	92	314	55	241	12,2
	CS/SS	93	314	55	241	12,2
DN25	DI/BRZ	105	321	67	241	12,6
	CS/SS	105	321	67	241	13,6
DN32	DI/BRZ	105	327	67	241	12,6
DN40	DI/BRZ	114	327	67	241	13,6
	CS/SS	118	327	70	241	14,1
DN50	DI/BRZ	114	330	67	241	14,5
	CS/SS	140	330	76	241	15,9

"B" Dimensions are for 35M actuator, for 55M actuator add 1.2" (30,5mm), for 85M actuator add 2" (50,8mm)

"D" Dimensions are for 35M actuator, for 55M actuator add 3" (76,2mm), for 85M actuator add 5.5" (140mm)

ORDERING SCHEMATIC

Model No	Size	Body Mat'l	/	1	2	3	4	5	6	7	8	9	10	11	12	13	14	15

	Model
74	Bellows Seal
74TP	Bellows Seal with Top Positioner
74SP	Bellows Seal with Side Positioner

	Size
050	1/2" (DN15)
075	3/4" (DN20)
100	1" (DN25)
125	1-1/4" (DN32)
150	1-1/2" (DN40)
200	2" (DN50)

	Body Material
DI	Ductile Iron
BR	Bronze
CS	Carbon Steel (WCB)
S6	Stainless Steel (CF8M)

1 & 2	End Connections
PT	NPT
BT	BSPT
I5	150# IFE DI above 2" or CS or SST valves
F5	150# FE DI below 2-1/2" or BR
I7	PN10 IFE DI above 2" or CS or SST valves
I6	PN16 IFE DI above 2" or CS or SST valves
BP	BSPP
SW	FSW
I3	300# IFE DI above 2" or CS or SST valves
F3	300# FE DI below 2-1/2" or BR
I8	PN25 IFE DI above 2" or CS or SST valves
I4	PN40 IFE DI above 2" or CS or SST valves

3 & 4	Trim
B3	303SS/TFE Pkg/316 Bellows
B6	316SS/TFE Pkg/316 Bellows
BH	H-C/TFE Pkg/H-C Bellows

5	Seat Material
A	303SST
B	316SST
V	303SS/Jorcote
W	316SS/Jorcote
X	303SS/JOR/JIC
Y	316SS/JOR/JIC

6	Cv (Kv)		
1	0.21 (0,28)	7	6.4 (5.5)
2	0.42 (0,36)	8	9.5 (8,2)
3	0.84 (0,72)	9	15 (13)
4	1.6 (1,4)	A	85 (73)
5	2.5 (2,2)	B	30 (26)
6	4.4 (3,8)		

7,8,9,10,11,12	Range & Actuator	
	Range	Actuator
N3Q3N3	3-15 DIR	35M
Q3Q3N3	3-15 REV	
C3B3A3	3-9 DIR	
D3B3A3	3-9 REV	
E3B3A3	9-15 DIR	
F3B3A3	9-15 REV	
G3B3A3	6-30 DIR	
H3B3A3	6-30 REV	
A5B5A5	3-15 DIR	55M
B5B5A5	3-15 REV	
C5B5A5	3-9 DIR	
D5B5A5	3-9 REV	
E5B5A5	9-15 DIR	
F5B5A5	9-15 REV	
G5B5A5	6-30 DIR	
H5B5A5	6-30 REV	
A8B8A8	3-15 DIR	85M
B8B8A8	3-15 REV	
C8B8A8	3-9 DIR	
D8B8A8	3-9 REV	
E8B8A8	9-15 DIR	
F8B8A8	9-15 REV	
G8B8A8	6-30 DIR	
H8B8A8	6-30 REV	

13 & 14	Accessories
00	None
AR	Air Regulator
S6	316SS Bolting

15	Action
D	Air-to-close
R	Air-to-open

16	I/P
0	None
3	I/P 35M Actuator
5	I/P 55M Actuator
8	I/P 85M Actuator

JORDANVALVE

Jordan Valve, a division of Richards Indsutries
3170 Wasson Road • Cincinnati, OH 45209
513.533.5600 • 800.543.7311 • 513.871.0105 (f)
info@richardsind.com • www.jordanttvalve.com

Jordan Valve reserves the right to make revisions to its product, specifications, literature and related information without notice. Please visit our website at www.jordanvalve.com for the latest information on our products.